AQUATIC

The bath people

# BEYOND EVERYDAY

## LIGHTWEIGHT AND DURABLE A² COMPOSITE BATHWARE

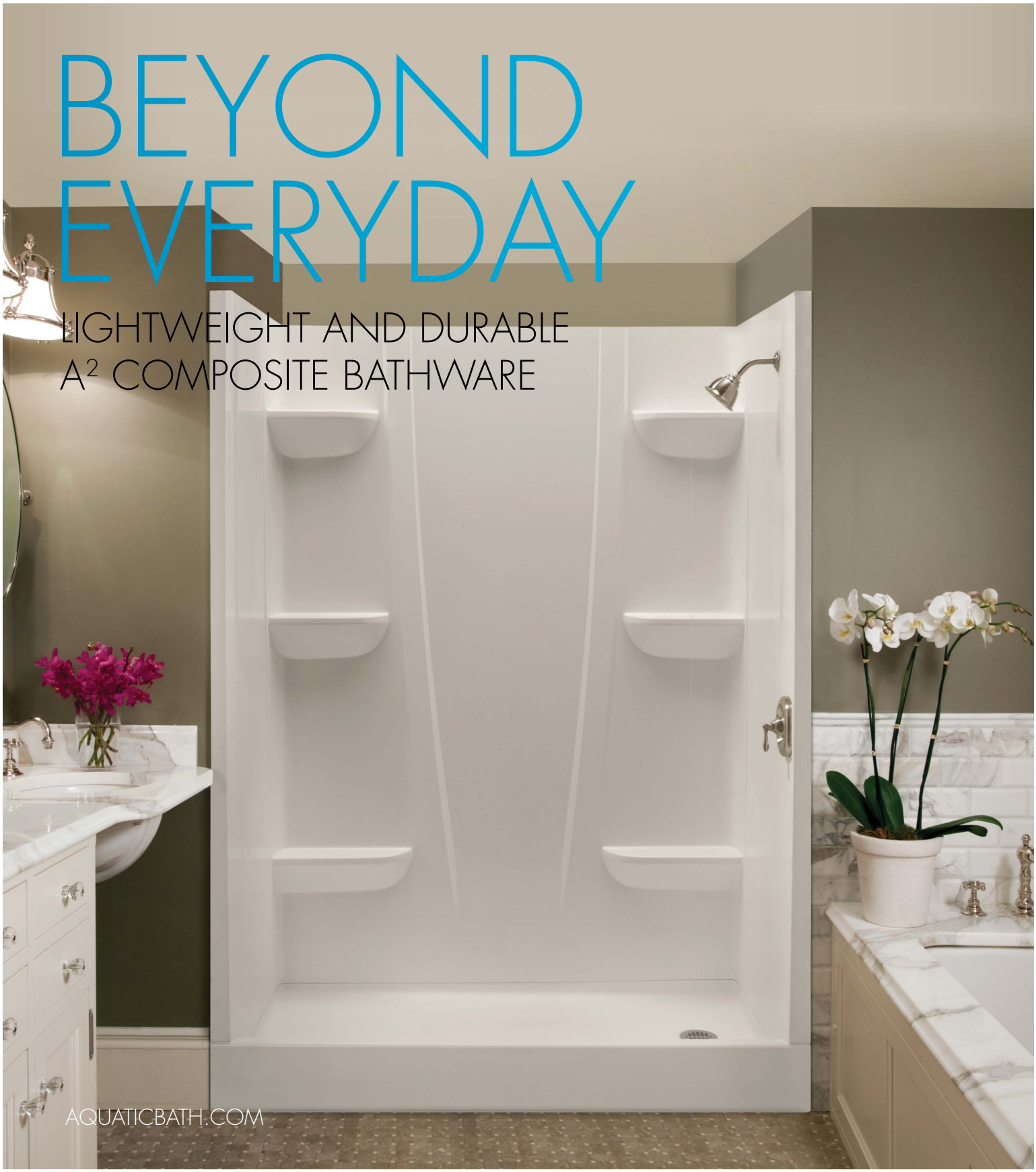

AQUATICBATH.COM

BEAUTIFUL

# INNOVATION

At Aquatic, every model we build, every detail we ponder, every innovation we develop is meant to advance not only our company, but also the industry. It's that thinking that led us to develop our new line of $A^2$ Composite four-piece sectional showers and tub/shower combinations. All are tested to meet or exceed national standards for load, strength, surface resilience and wear. And all are stylish, functional and ingeniously simple.

# WHAT IS A² COMPOSITE?

Short for Aquatic Advantage, our lightweight and durable A² Composite is an engineered compound of resin, glass and special fillers formed into sheets. These sheets are then placed under high pressure and heat to liquefy the compound, allowing it to flow and take the shape of almost any form imaginable. The results are the shower and tub/shower models you see here. Simple, stylish and a snap to install.

### EASY INSTALLATION

- Sectional, lightweight pieces can be installed by one person

### DESIGNER STYLING

- Versatile design blends with any decor

### ENGINEERED TO LAST

- Pre-leveled base and strong structural ribs

### WATER MANAGEMENT FEATURES

A² shower bases feature a patented system of design elements that ensure water is directed away from walls and toward the drain.

PATENTED

Extended Flange

PATENTED

Weep channels in all four corners provide an enhanced path for water migration

PATENTED

Step design offers guides for application of various wall finish materials.

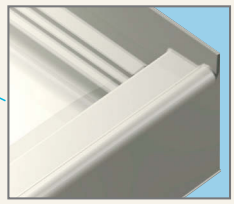

The raised front profile provides greater direction of water toward the drain

# INTELLIGENCE IS IN THE DETAILS

The A² 4-piece sectional collection is made for quick and easy installation, with sections that interlock for a seamless fit without the need for special brackets, clips or caulking. It's the perfect fit for tight or existing spaces, like bathroom remodels. And it's made with a durable composite material that's strong enough to install grab bars and sleek enough to fit into any modern design. Intelligent? We think so. And we think our customers will feel the same.

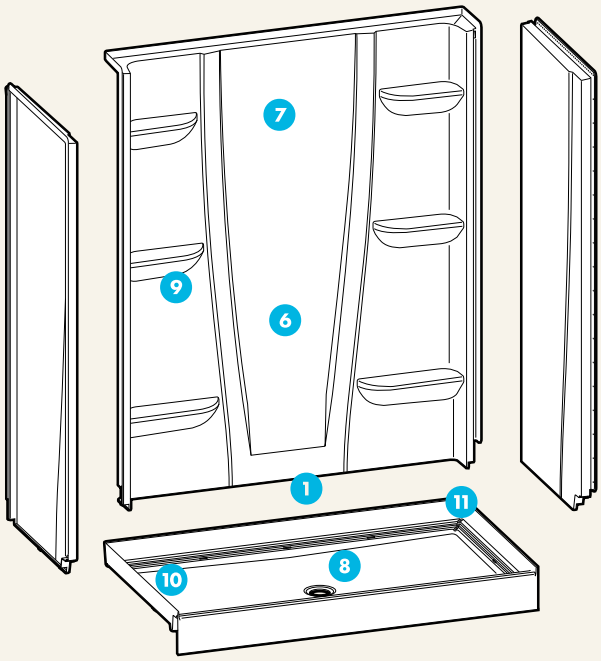


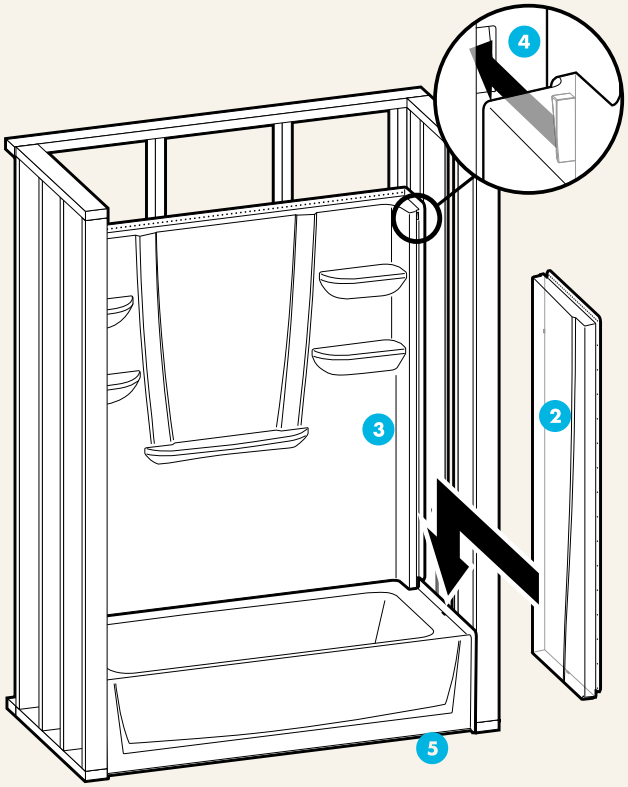


## PRODUCT FEATURES

### INSTALLATION FEATURES

1. 4-piece sectional models
2. Lightweight pieces
3. 100% caulk free
4. Wedge/lock system
5. Pre-leveled base
- Simple tongue and groove connections
- Can install direct to studs
- No need for additional backing

### AESTHETIC FEATURES

6. Durable, high gloss finish
7. Clean, smooth wall design
- Available in White and Biscuit

### DESIGN FEATURES

8. Left, right and center drain, configurations
9. Multiple toiletry shelves for extra storage
10. Slip-resistant, textured bottom
11. Patented water management system
- Available with age-in-place backing for future bar placement
- 15 year limited residential warranty

# SHOWER BASES

| | |
|---|---|
| 3232CPANNS | $180 |
| 32 x 32 x 6 | |
| Center Drain | |
| Square | |

| | |
|---|---|
| 3636CPANNS | $190 |
| 36 x 36 x 6 | |
| Center Drain | |
| Square | |

| | |
|---|---|
| 4242CPANNS | $249 |
| 42 x 42 x 6 | |
| Center Drain | |
| Square | |

| | |
|---|---|
| 4834CPANNS | $220 |
| 48 x 34 x 6 | |
| Center Drain | |
| Rectangle | |

| | |
|---|---|
| 6034CPANNS | $280 |
| 60 x 34 x 6 | |
| Center Drain | |
| Rectangle | |

| | |
|---|---|
| 6030CPANNSL/R | $280 |
| 60 x 30 x 6 | |
| Left or Right Drain | |
| Rectangle | |

# SHOWERS

| | |
|---|---|
| 3232CS | $575 |
| 3232CSA | $695 |
| 32" x 32" x 76" | |
| Center Drain | |

| | |
|---|---|
| 3636CS | $605 |
| 3636CSA | $725 |
| 36" x 36" x 76" | |
| Center Drain | |

| | |
|---|---|
| 6034CS | $755 |
| 6034CSA | $865 |
| 60" x 34" x 76" | |
| Center Drain | |

| | |
|---|---|
| 4834CS | $650 |
| 4834CSA | $765 |
| 48" x 34" x 76" | |
| Center Drain | |

| | |
|---|---|
| 6030CS | $745 |
| 6030CSA | $855 |
| 60" x 30" x 76" | |
| Left or Right Hand Drain | |

MODELS LISTED IN GRAY FEATURE REINFORCED WALLS FOR FUTURE GRAB BAR INSTALLATION

# TUB-SHOWERS

| | |
|---|---|
| 6030CTS | $630 |
| 60″ x 30″ x 76″ | |
| 6030CTSM | $660 |
| 60″ x 30″ x 79″ | |
| Above-floor tub/shower | |
| Left or Right Hand Drain | |

| | |
|---|---|
| 6030CTS2 | $630 |
| 6030CTS2A | $765 |
| 60″ x 30″ x 76 | |
| 6030CTSM2 | $660 |
| 6030CTSM2A | $795 |
| 60″ x 30″ x 79″ | |
| Above-floor tub/shower | |
| Left or Right Hand Drain | |

| | |
|---|---|
| F6030CTS2 | $1785 |
| 60″ x 30″ x 76″ | |
| Left or Right Hand Drain | |

*Shown with optional seat (7027BPHENWH)*

| | |
|---|---|
| 6036CTS | $975 |
| 60″ x 36″ x 79″ | |
| 6036CTSM | $1000 |
| 60″ x 36″ x 82″ | |
| Above-floor tub/shower | |
| Left or Right Hand Drain | |

| | |
|---|---|
| 6042CTS | $1055 |
| 60″ x 42″ x 79″ | |
| 6042CTSM | $1055 |
| 60″ x 42″ x 82″ | |
| Above-floor tub/shower | |
| Left or Right Hand Drain | |

| | |
|---|---|
| 6036CTS2 | $975 |
| 6036CTS2A | $1130 |
| 60″ x 36″ x 79″ | |
| 6036CTSM2 | $1000 |
| 6036CTSM2A | $1155 |
| 60″ x 36″ x 82″ | |
| Above-floor tub/shower | |
| Left or Right Hand Drain | |

| | |
|---|---|
| 6042CTS2 | $1025 |
| 6042CTS2A | $1180 |
| 60″ x 42″ x 79″ | |
| 6042CTSM2 | $1055 |
| 6042CTSM2A | $1210 |
| 60″ x 42″ x 82″ | |
| Above-floor tub/shower | |
| Left or Right Hand Drain | |

MODELS LISTED IN GRAY FEATURE REINFORCED WALLS FOR FUTURE GRAB BAR INSTALLATION

# BATHTUBS

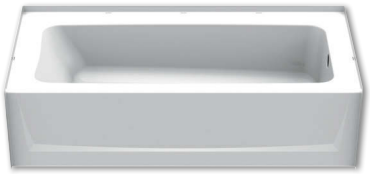

| | |
|---|---|
| 6030CTL/R | $250 |
| 60″ x 30″ x 15″ | |
| 6030CTML/R | $280 |
| 60″ x 30″ x 18″ | |
| Above-floor tub | |
| Left or Right Hand Drain | |

| | |
|---|---|
| 6036CTL/R | $570 |
| 60″ x 36″ x 18″ | |
| 6036CTML/R | $595 |
| 60″ x 36″ x 21″ | |
| Above-floor tub | |
| Left or Right Hand Drain | |

| | |
|---|---|
| 6042CTL/R | $595 |
| 60″ x 42″ x 18″ | |
| 6042CTML/R | $625 |
| 60″ x 42″ x 21″ | |
| Above-floor tub | |
| Left or Right Hand Drain | |

MODELS LISTED IN GRAY FEATURE REINFORCED WALLS FOR FUTURE GRAB BAR INSTALLATION

## What makes an Aquatic bath great? It's more of a question of 'who?'

Behind every product is an expert—an engineer, a designer, a machine operator—someone who is passionate about making bathing a comfortable and enjoyable experience for everyone.

So when you choose Aquatic, you're choosing more than a shower, tub or other bath product.

You're choosing people who are the best at their craft. And that means you can relax knowing you're getting the best quality, value and options for your specific project.

AQUATIC

The bath people

Customer Service Center: 800.945.2726

www.aquaticbath.com

AQA2BRCH_0516